REVISION HISTORY				
ZONE	REV	DESCRIPTION	DATE	BY
-	00	ORIGINAL ISSUE	6/18/15	GCP

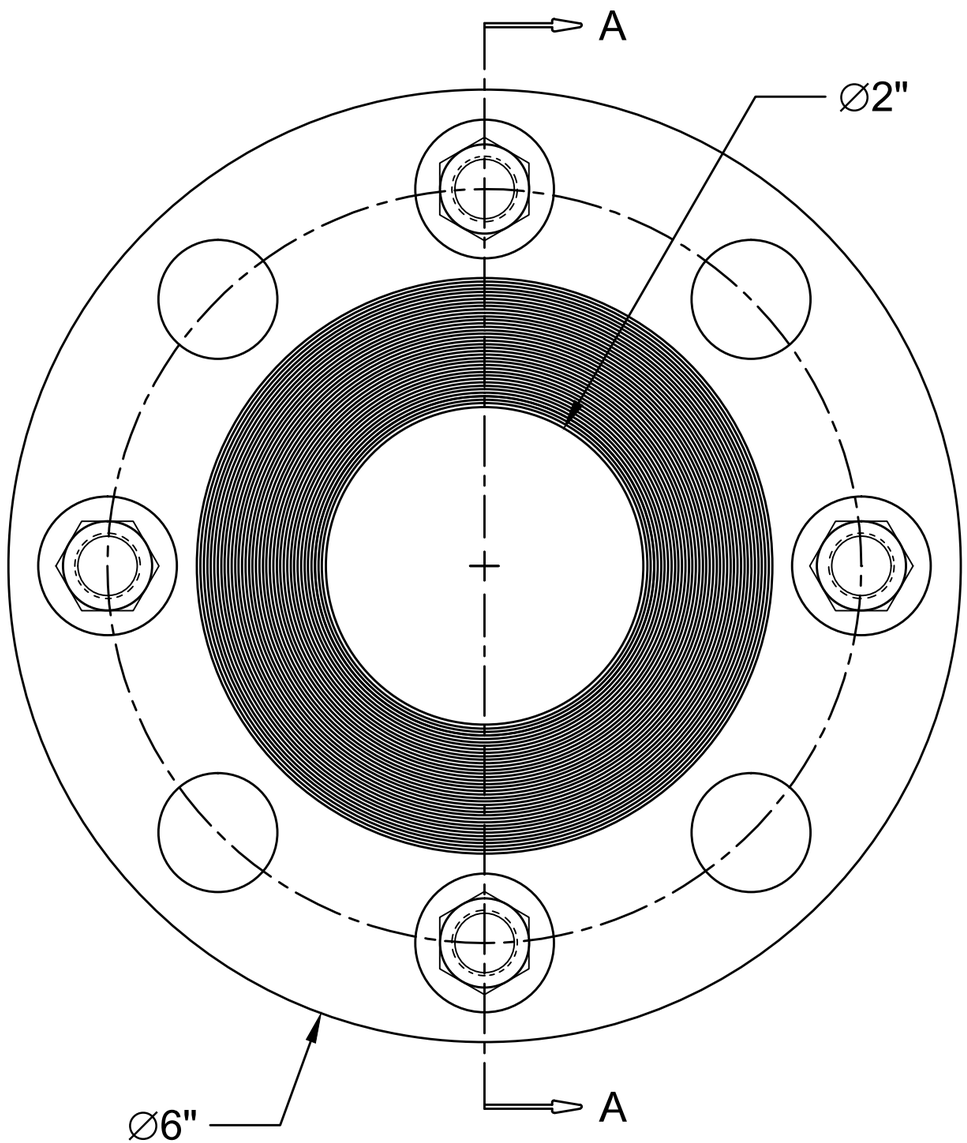

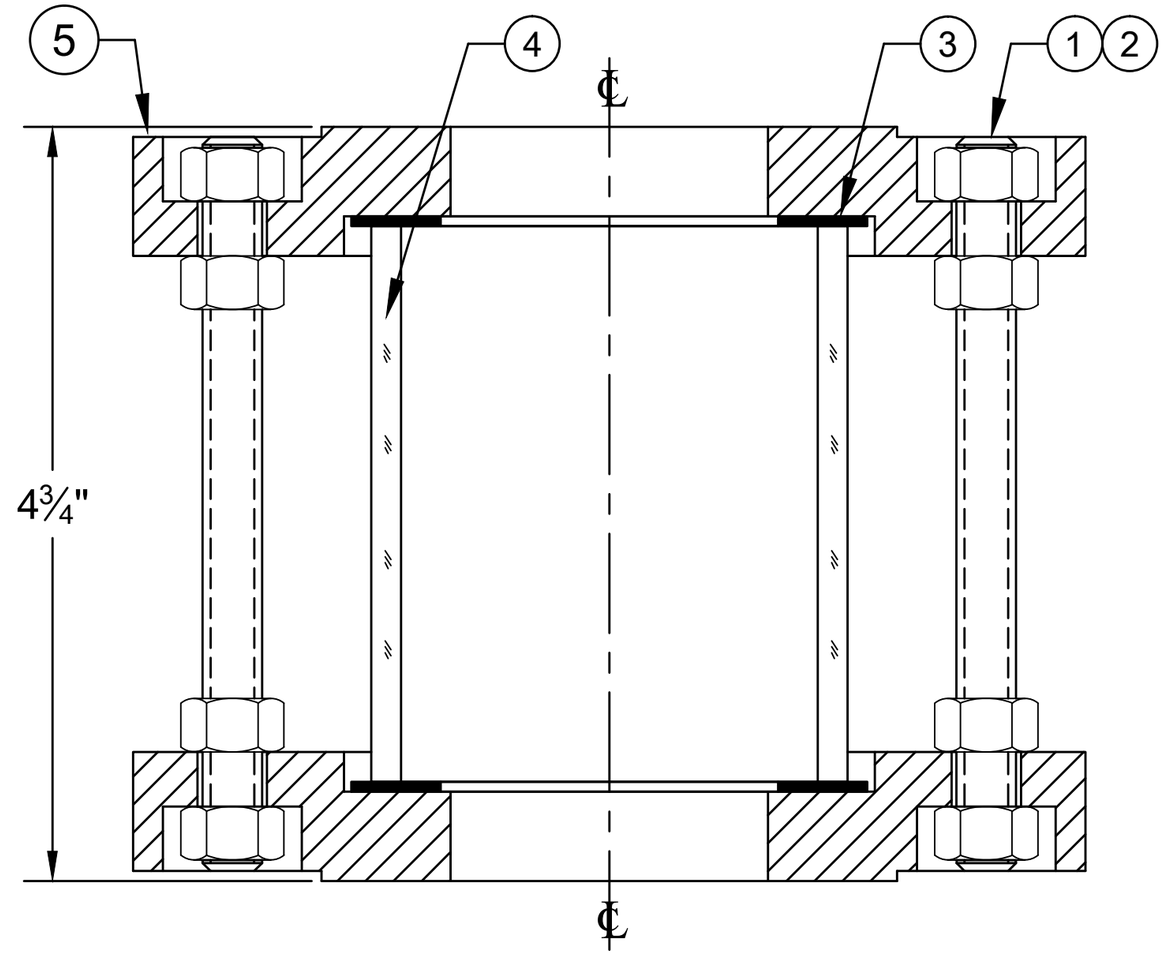

A-A

QTY	SYM	PART NUMBER	DESCRIPTION
1	5	XXXX-XXXXX-XXXX	HEAD
1	4	XXXX-XXXXX-XXXX	CYLINDER
1	3	XXXX-XXXXX-XXXX	GASKET
16	2	XXXX-XXXXX-XXXX	HEX NUT
4	1	XXXX-XXXXX-XXXX	THREADED STUD

BILL OF MATERIAL

NOTES:
MAX RATING: 100PSI/FV@100°F
MAX TEMPERATURE: 500°F*

* w. proper gasket selection. Consult Factory

PAPAILIAS INCORPORATED
245 PEGASUS AVE, NORTHVALE, NJ 07647 | [201]767-4027 WWW.PAPAILIAS.COM

MODEL#: 1"LIF
1" 150# FLANGED FULL VIEW SIGHTFLOW INDICATOR

Notes:
1. Flanged Ends Mate to 1" ANSI 150# B16.5 RF
2. Perform ambient temperature hydrotest at 1.5 times operating pressure.
4. All units supplied with a 304 Stainless Steel Tag.
5. Maximum Rating: 100 PSI/FV@100°F

ASME CODE CALCULATIONS AND ANY RESULTING ADDITIONAL MATERIAL NEEDED TO REINFORCE SIGHT GLASS OPENING TO MEET ASME CODE IS THE RESPONSIBILITY OF THE VESSEL MANUFACTURER.

THIS DRAWING IS THE SOLE PROPERTY OF THE J.G. PAPAILIAS COMPANY, INC AND NEITHER THE DOCUMENT NOR THE INFORMATION CONTAINED HEREIN SHALL BE COPIED, REPRODUCED, DISCLOSED OR TRANSFERRED EXCEPT AS AUTHORIZED IN WRITING BY AN OFFICER OF THE J.G. PAPAILIAS CO., INC.

DRAWN:	GCP	6/18/15	SIZE	CAGE CODE	DRAWING NUMBER	REV
CHECKED:	GCP	6/18/15	B	1Z740	03L032	0
APPROVED:	GCP	6/18/15	SCALE: 1:1	EST. WEIGHT: 11½ LB [5 KG]		SHEET: 1 OF 1